MULTIPLE VIEWING SYSTEM

C2h15

DUAL FORMAT

mass

SIDE A

SIDE B

GETTING STARTED

STARTING THE FIRST TIME

PACKAGE CONTENTS

MAINTENANCE

PRECAUTIONS

UNPACKING YOUR MASS MULTIPLES™

USING THE QUICK RELEASE

CONNECTING YOUR MONITORS

OPERATION

LOCATION OF CONTROLS

SPECIFICATIONS

TROUBLESHOOTING

ON SCREEN DISPLAY MENU

OSD FUNCTION

SUB-MENU FUNCTIONS

OTHER INFORMATION

WARRANTY STATEMENT(S)

CUSTOMER SUPPORT

OTHER LCD INFORMATION

FCC INFORMATION

GETTING STARTED

STARTING THE FIRST TIME

In a multiple screen configuration, most video cards will boot one screen first, thus allowing you to configure your system as you see fit. Once the appropriate drivers have been loaded, the system will re-boot and bring up both screens. You may then proceed to arrange your desktop, configure any particular environment characteristics you wish, and start up your applications.

PACKAGE CONTENTS

Your C2H-15 dual format package includes:

A dual head monitor system with integral video cables terminated with 15 pin high density mini sub-D connectors.

One universal input power supply complete with power cord.

User manual, Support Structure assembly instructions

Support Structure fasteners

Warranty Statement

Registration Card

Macintosh adapter (optional)

MAINTENANCE

Liquid Crystal Displays are highly sophisticated pieces of equipment. Avoid touching the screen surface with any sort of hard object, as this may result in scratches, which will reduce the effectiveness of the display and are not covered by your warranty.

Always handle your monitor with care when moving. If you move the screens around on a frequent basis, it is also good idea to periodically check to ensure that all fittings and screws are tight.

PRECAUTIONS

Avoid touching or applying pressure to the screen with your fingers as damage to the liquid crystal layer may occur. Wipe marks from the screen with absorbent cotton or a soft cloth. Do not use chemical cleaners.

The monitor contains high voltage parts. You may suffer serious injury if you touch these parts.

Avoid exposing the monitor to direct sunlight or another heat source. The monitor should be facing away from direct sunlight to reduce glare.

Do not place anything on the monitor that blocks the flow of air through the vent which may prevent adequate dissipation of heat.

Ensure the area around the monitor is clean and free of moisture.

Do not place heavy objects on the monitor, video cable or power cord.

If smoke, abnormal noise, or strange odor is present, immediately switch the monitor off and call your dealer. It is dangerous to continue using the monitor.

PRECAUTIONS

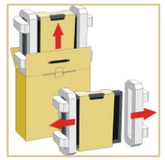

1

Carefully unpack the LCD monitors.

IMPORTANT:
Handle the monitors with care so that pressure is not placed on the front surface of the LCD panel as this may result in permanent damage to the panel. Don't rest any objects on top of the screens.

2

Unpack the structure carefully.

If base needs to be assembled refer to Support Structure assembly procedure on how to assemble base using wing nut and washers provided.

If a base tray is available use this to prevent the unit from tipping during installation. Place the structure and base tray on a level surface.

3

Caution: secure base when installing LCD screens. To prevent the unit from tipping assemble screens from center out. If base tray is available simply slide from assembly.

Once you've located the structure at a desired location then simply slide the LCD monitors onto patented 'quick release' system. Ensure that the LCD panel locks in place.

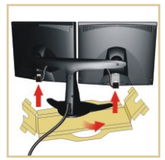

4

After confirming that all the LCD panels are secured, feel free to adjust the panels to the desired position. Hold the LCD screen without applying pressure on the LCD surface, and adjust. Proceed to connect the display system to your computer as detailed in this user manual. Connect monitor to appropriate cables provided.

USING THE QUICK RELEASE

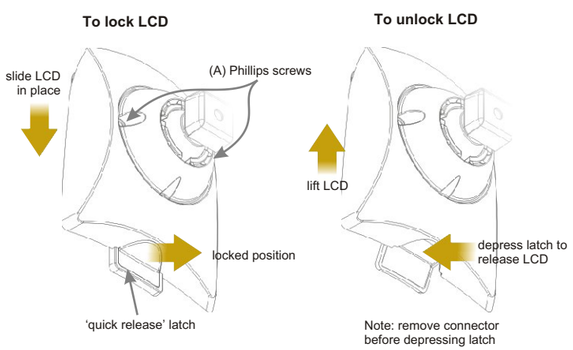

DETAIL OF QUICK RELEASE SYSTEM

DOCKING YOUR LCD AND TIGHTENING BALL JOINT

1. Match the 'dove tail' to ensure that the LCD unit sits flat against the 'ball and socket' assembly.
2. Simply slide the two interlocking parts, while ensuring that the unit is locked in place. Now you can proceed and install the connectors.
3. To remove the LCD head reverse the procedure. To unlock the LCD unit you must depress the 'quick release' latch. Ensure a proper grip on the LCD to prevent it from slipping. **When removing the LCD panels make sure you counter the weight of the other LCD screens to prevent the unit from tipping.** Lift the LCD panel and place on a flat surface.
4. To tighten 'ball joint' simply turn two Phillips screws (A), turn a quarter turn until desired position is achieved.
5. Review Detail of Quick Release System (above) for the location of the 'quick release' latch.

CONNECTING YOUR MONITORS

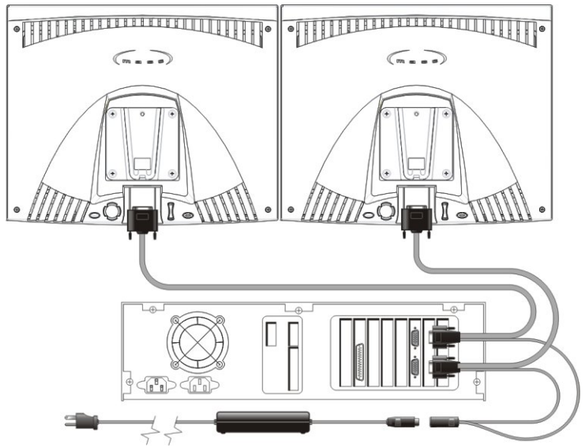

OPERATION

1. Ensure power is off before proceeding with the installation.
2. Connect the video cable marked with "A" to the first video output of your computer.
3. Similarly connect the video cable marked with "B" to the second video output of your computer.
4. Connect the output cables of the power supplies to the five pin DIN connectors.
5. Connect the power cords.
6. Turn your computer on.
7. Turn the screens on by pressing the power button located on the lower back of each monitor. Power indicator will light.

LOCATION OF CONTROLS

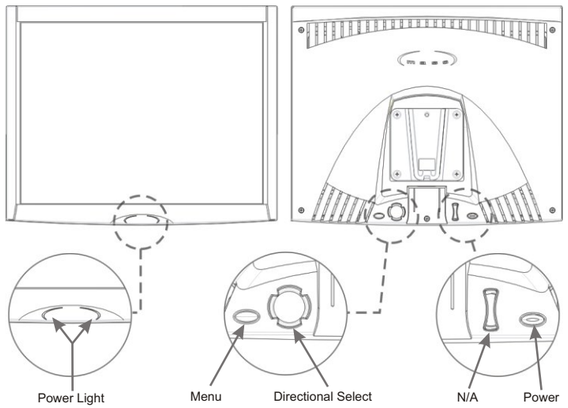

INTERFACE DESCRIPTION

REAR CONTROL PANEL

Power	Turns the monitor On/Off
Menu	Displays the menu. Exits the menu or control screen.
Up/Down Select	Highlights next menu item
Increment/Decrement	(+/-) Changes the value of the selected item or highlights the next menu item in a submenu.

FRONT PANEL

Green light = power on	Amber light = loss of video

SPECIFICATION

Property	Description
Monitor Type	Integrated dual screen LCD
Size and Weight	19" x 27.0" x 10.0" (H x W x D) approximately 17 lbs (8 kg)
Power Requirements	Line Voltage: 100 to 240 VAC, 50 - 60 Hz Power: 18W (operating)
Resolution (per screen, multi-scan)	640 x 400, 720 x 400, 640 x 480, 800 x 600, 832 x 624, and 1024 x 768
Resolution (aggregate max.)	2048 X 768
Pixel Pitch	0.297 (H) x 0.297 (V)
Color Depth	More than 16 million
Viewing Angle	H +65°/-65° V+55°/-45° typical
Brightness	250cd/m^2
Contrast Ratio	400:1 typical
Screen Size and Type	15" diagonal active matrix TFT
Surface Treatment	Anti-glare and hard coatings 2H
User Controls	Power on/off On Screen Control - Menu Select up/down Increment / decrement
Approvals	FCC, CE, Entela
Input Connections	Two x 15-pin D-sub for analog RGB (0.7Vp-p 75 Ohms)
Support Structure	Aluminum

TROUBLESHOOTING

Problem	Suggested remedies
No image on one or more screens	Make sure cables are properly fastened. Check power to monitors. Check video connection from computer to monitors. Check seating and bus location of video card. Use known working monitor to check for signal. Re-boot the computer. Re-install driver software.
Screen viewing order is incorrect.	Use driver software to re-tile monitor order.
Colors are not clear.	Check color settings within the O/S controls..
Screens will not stay in one position.	Check to make sure screen mounting pivots are properly fastened and tightened.

ON SCREEN DISPLAY MENU

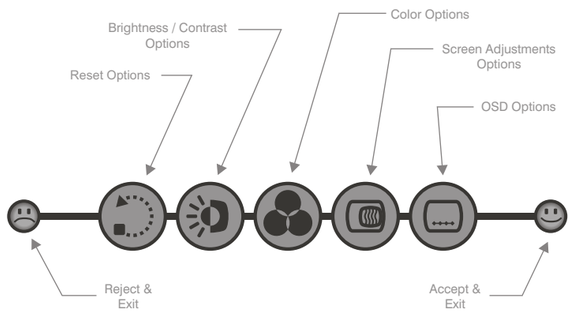

Main Menu OSD

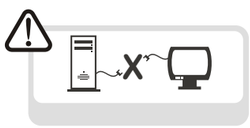

Cable Not Connected

Mode Error

Change Computer Hz

Reset Options

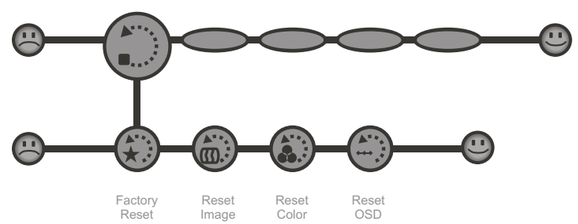

Brightness / Contrast Options

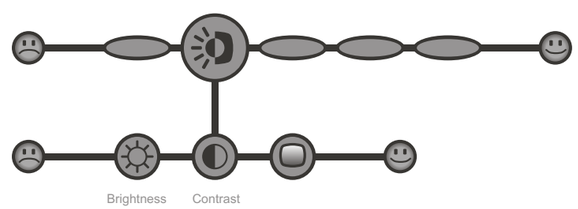

Color Options

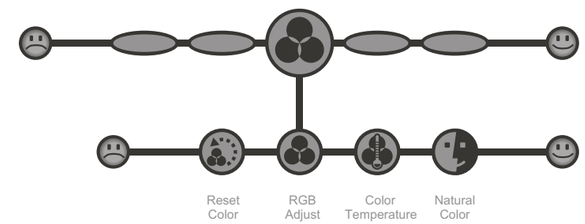

Screen Adjustment Options

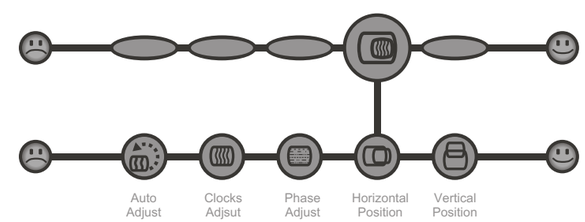

OSD Options

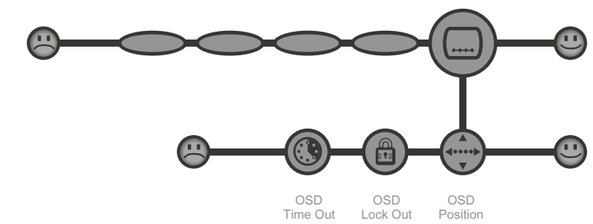

LIMITED WARRANTY

Definitions.

i. "We", "us" and/or "our" means MASS Engineered Design Inc. ("MASS").
ii. "You" or "your" or "purchaser" means the individual or entity named on the invoice.

MASS Engineered Design Inc. warrants to the original consumer purchaser ("purchaser") of this product that the MASS product purchased shall be free from defects in materials and workmanship for a period of 3 years of normal use. This warranty does not cover any incom-patibilities due to the purchaser's computer, hardware, software or any other config-uration in which the product interfaces. If a defect covered by this limited warranty occurs, MASS, at its option, will repair or replace the defective MASS product free of charge.

MASS reserves the right to replace any defective MASS product with product of equivalent or superior performance. Such replacement product may be remanufactured product or manufactured using remanufactured components at MASS' option. Repaired or replaced product will be covered by the same warranty.

This 3-year warranty does not apply to defects caused by abuse, misuse, negligence, accident, tampering, modification or other causes not related to defective materials or workmanship. MASS reserves the right to impose a reasonable charge for the repair of products returned with defects resulting from any of the above causes and for returns where the product is found to be in good working condition.

Return Policy. To return merchandise, you must obtain an RMA number. Please call the MASS customer service department and provide the invoice number, item description, and serial number(s) of the merchandise you wish to return. Returned merchandise must be placed in original packaging, and may include product manuals and other accessories. No MASS product will be accepted for repair without a RMA number. For any returned merchandise we will be responsible for shipping cost incurred on the first 30-days. After 30-days MASS will only be responsible for shipment costs to return the merchandise to the purchaser. Any additional shipping costs incurred after 90-days of original purchase date will be the sole responsibility of the purchaser.

No other warranties are expressed or implied, including but not limited to, any implied warranties of merchantability or fitness for a particular purpose. In no event shall MASS be liable for consequential or incidental damages resulting from the use or installation of any MASS product, or the breach of any express or implied warranties. MASS' liability to purchaser with respect to any claim or loss arising out of this transaction or alleged to have resulted from an act or omission of MASS shall be limited to purchasers' cost of the MASS product.

WARRANTY

LIMITATION OF IMPLIED WARRANTIES

There are no warranties, express or implied, which extend beyond the description contained herein including the implied warranty of merchantability and fitness for a particular purpose.

EXCLUSION OF DAMAGES

MASS Engineered Design Inc.'s liability is limited to the cost of repair or replacement of the product. MASS Engineered Design Inc. shall not be liable for:

1. Damage to other property caused by any defects in the product, damages based upon inconvenience, loss of use of the product, loss of time, loss of profits, loss of business opportunity, loss of goodwill, interference with business relationships, or other commercial loss, even if advised of the possibility of such damages.

2. Any other damages, whether incidental, consequential or otherwise.

3. Any claim against the customer by any other party.

For MASS Inc. products sold outside North America, contact your MASS Engineered Design Inc. Dealer warranty information and service.

Some states do not allow the exclusion of consequential or incidental damages, so the above exclusion may not apply to you. This warranty provides you with specific legal rights. You may have other rights that vary from state to state.

CUSTOMER SUPPORT

MASS Engineered Design Inc. can be reached in the following ways:

474 Wellington Street West, Toronto, Ontario, Canada M5V 1E3

Email: technical@massedi.com

Web: www.massmultiples.com
www.massedi.com

Phone: (416) 593-4663
Fax: (416) 593-5262

1•888•603•9858

WARNING

Handling the cord of this product will expose you to lead, a chemical to the State of California to cause [cancer, and] birth defects or other reproductive harm. ***Wash hands after handling.***

CAUTION
RISK OF ELECTRIC SHOCK
DO NOT OPEN ENCLOSURE

CAUTION: To prevent electric shock, do not remove cover. No user-servicable parts inside. Refer servicing to qualified service person. For home and office use.

APPROVALS

Tested to Comply With FCC Standards

US C enteia Certified

FCC INFORMATION

This equipment has been tested and found to comply with the limits for a Class B digital devices, pursuant to Part 15 of the FCC Rules. These limits are designed to provide reasonable protection against harmful interference in a residential installation.

This equipment generates, uses, and can radiate radio frequency energy and, if not installed and used in accordance with the instruction manual, may cause harmful interference to radio communications. However, there is no guarantee that interference will not occur in a particular installation. If this equipment does cause harmful interference to radio or television reception, which can be determined by turning the equipment off and on, the user is encouraged to try to correct the interference by one of more of the following measures:

Reorient or relocate the receiving antenna

Increase the separation between the equipment and receiver

Connect the equipment into an outlet on a circuit different from that to which the receiver is connected

Consult the dealer or an experienced radio/TV technician for help.

Ensure the area around the monitor is clean and free of moisture

FCC WARNINGS:

Changes or modifications not expressly approved by MASS INC. could void the user's authority to operate the equipment.

IBM XT, AT, 386, 486 and PS/2 are registered trademarks and/or trademarks of International Business Machines Corporation

Windows is a registered trademark of Microsoft Corporation

Pentium is a trademark of Intel Corporation

Macintosh and Power Macintosh are registered trademarks of Apple Computer Inc.

VESA is a registered trademark of Video Electronics StandardsAssociation. DPMS and DDC are trademarks of VESA.

© 2003-2005 MASS Engineered Design Inc. reserves the right to change product specification and documentation without notice. MASS shall not be liable for technical or editorial errors or omissions contained herein; nor for incidental or consequential damages resulting from furnishing this material, or the performance or use of this product. This document may not copied, reproduced or transmitted by any means in whole in part, for any purpose without the express written permission of MASS EDI. All rights reserved. All MASS Multiples™ product are protected by US Patents: RE. 36,978 | 5,687,939 | US 6,343,006 B1 | 2384 611

FOR YOUR RECORDS

The serial number of this product is on the back of the monitor. Write the serial number of this unit in the space below and keep this booklet as a permanent record of your purchase to aid in identification in the event of theft or loss.

Product Name: **DUAL FORMAT M.V.S.**

Model: **C2H15**

Serial Number(s):

Purchase Date:

mass